Ctr.de Manresa a Calaf Km.30.3
Sant Pere Sallavinera 08281
(Barcelona) Spain
Tel. +34 93.868.12.26
Fax. +34 93.868.11.62
E-mail Info@discapa.com

Technical Manual

CYF

Fco. López
Dpto. de Diseño
10 Septiembre 07
Revisión 1

PICTURE 1

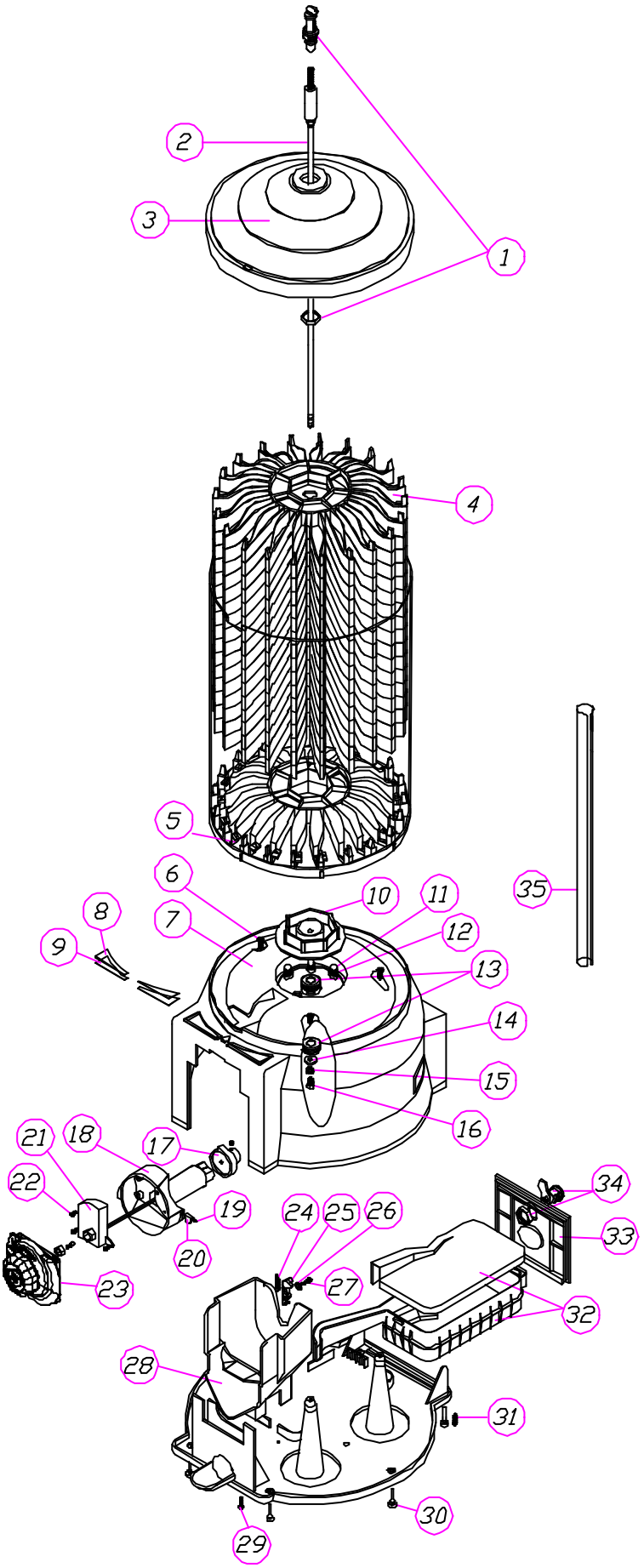
1
2
3
4
5
6
7
8
9
10
11
12
13
14
15
16
17
18
19
20
21
22
23
24
25
26
27
28
29
30
31
32
33
34
35

SUMMARY		
Nº	Code	Description
1	R1CE-S/M	LID LOCK
2	R3MT-011	460 MM. ROD
3	R3PL-001	LID
4	R3PL-071	STAR SEGMENT
5	R3PL-073	FIXED STAR SEGMENT LEVER
6	R3FE-001	4,8X19 BODY FIXING SCREW
7	R3PL-011	CYF BODY
8	R3GR-301	PRICE AND QUANTITY STICKER PROTECTOR
9	R3GR-001	PRICE AND QUANTITY STICKER
10	R3MT-001	POSITIONER PLATE
11	R3FE-402	STEEL BALL
12	R3FE-403	STEEL BALL SPRING
13	R3FE-401	BEARING
14	R3FE-201	POSITIONER PLATE SCREW WASHER
15	R3FE-202	POSITIONER PLATE STAR SCREW WASHER
16	R3FE-003	6X16 POSITIONER PLATE SCREW
17	R3PL-052	DRUM CAM
18	R3PL-051	DRUM
19	R3PL-054	DRUM NIPPLE
20	R3FE-006	2,5X16 DRUM NIPPLE SCREW
21	R3PL-081	SPRING MECHANISM
22	R3FE-005	3,3X9,5 SPRING MECHANISM FIXING SCREW
23	R3MO-S/M	CYF COIN MECHANISM
24	R3FE-404	PAWL SPRING
25	R3PL-053	DRUM PAWL
26	R3FE-203	PAWL SCREW WASHER
27	R3FE-002	3,5X16 PAWL SCREW
28	R3PL-031	PRODUCT DELIVERY CHUTE
29	R3FE-004	3,9X13 PRODUCT DELIVERY CHUTE FIXING SCREW
30	R3PL-022	CYF BASE HEEL
31	R3FE-008	3,3X16 BODY SECURITY SCREW
32	R3PL-061	COIN BOX + LID
33	R1MT-001	COIN BOX DOOR
34	R3CE-S/M	COIN BOX LOCK
35	R3PL-091	REFILLING TUBE

PICTURE 2

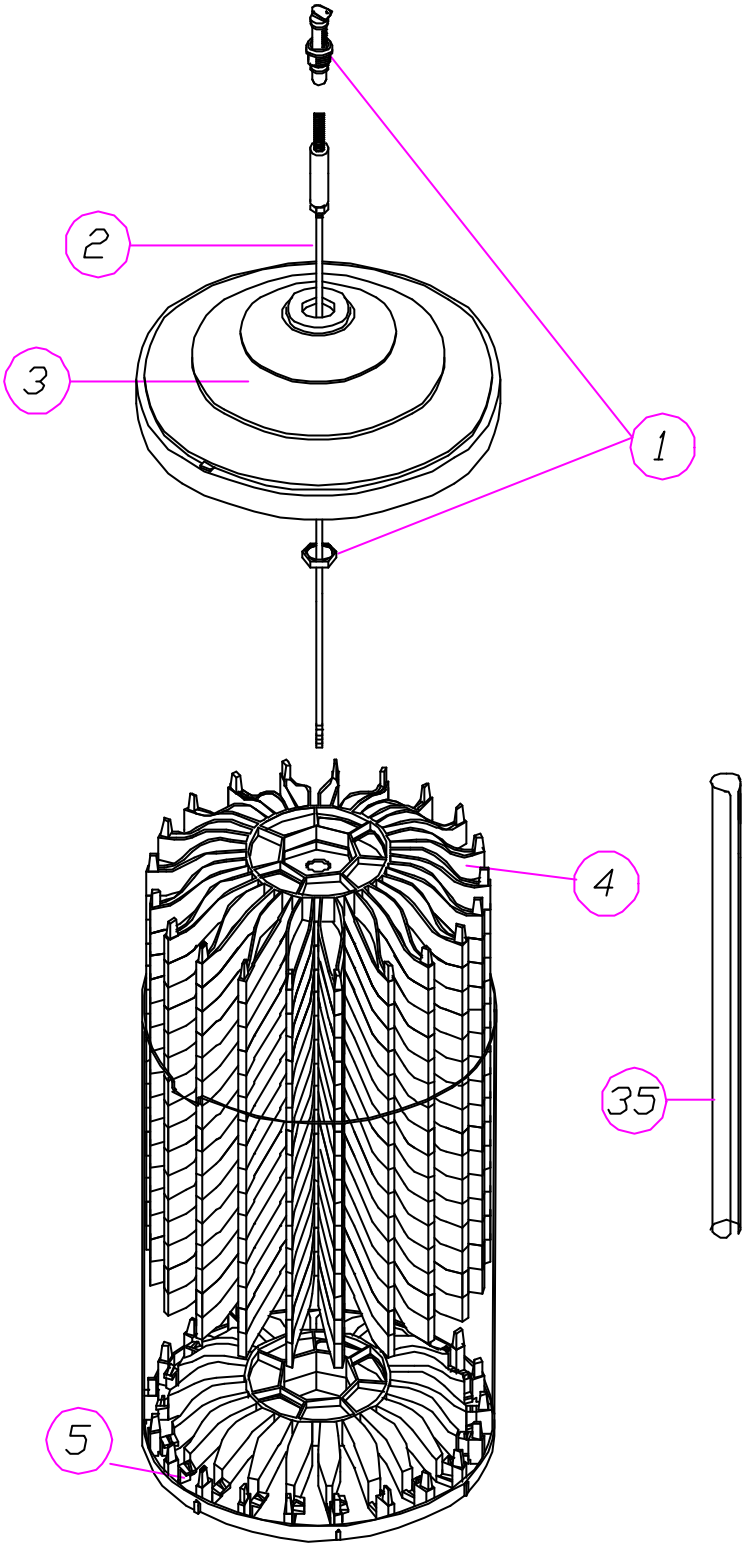

PICTURE 2 PARTS		
Nº	Code	Description
1	R1CE-S/M	LID LOCK
2	R3MT-011	460 MM. ROD
3	R3PL-001	LID
4	R3PL-071	STAR SEGMENT
5	R3PL-073	FIXED STAR SEGMENT LEVER
35	R3PL-091	REFILLING TUBE

PICTURE 3

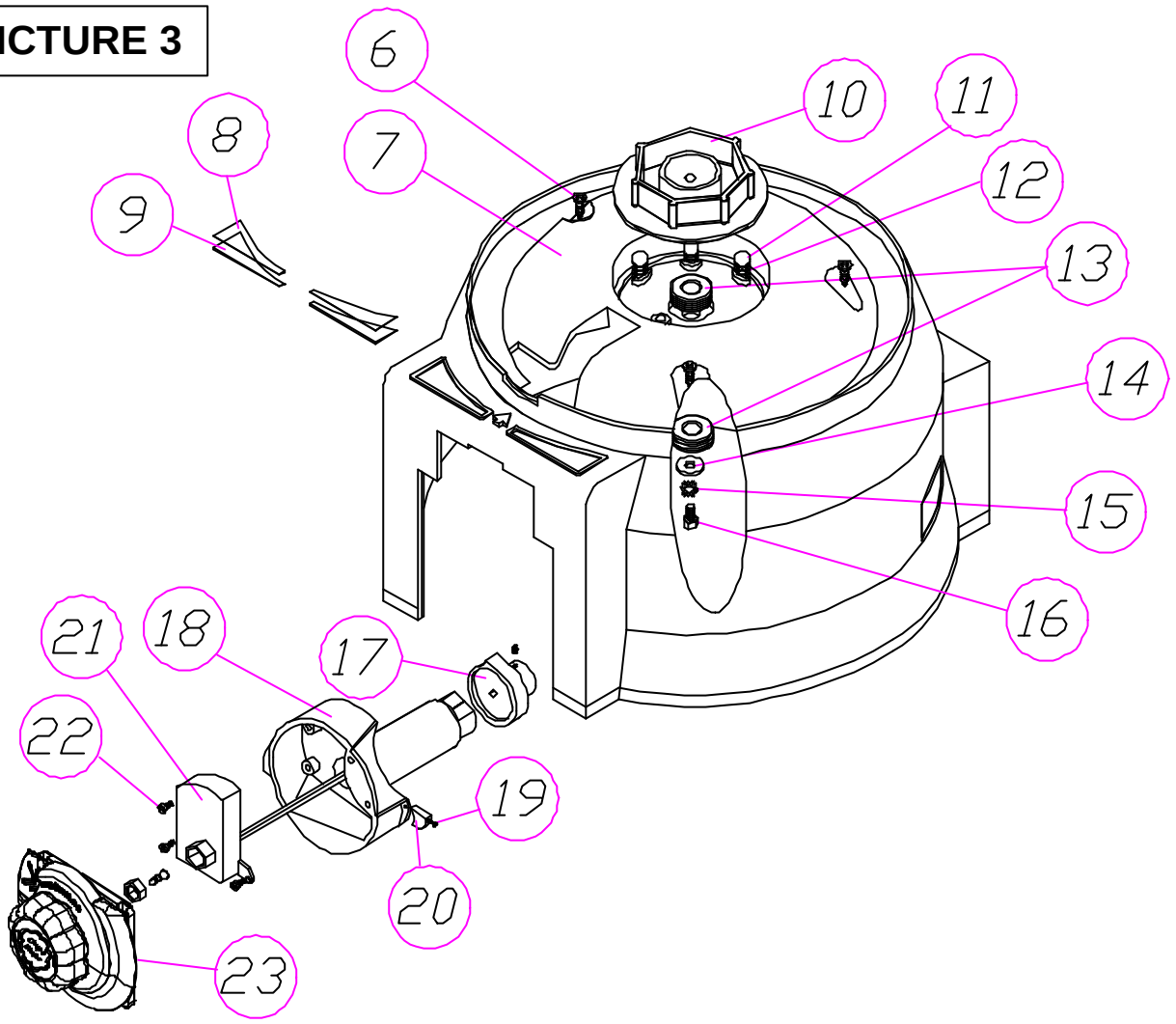

PICTURE 3 PARTS		
Nº	Code	Description
6	R3FE-001	4,8x19 BODY FIXING SCREW
7	R3PL-011	CYF BODY
8	R3GR-301	PRICE AND QUANTITY STICKER PROTECTOR
9	R3GR-001	PRICE AND QUANTITY STICKER
10	R3MT-001	POSITIONER PLATE
11	R3FE-402	STEEL BALL
12	R3FE-403	STELL BALLS SPRING
13	R3FE-401	BEARING
14	R3FE-201	POSITIONER PLATE SCREW WASHER
15	R3FE-202	POSITIONER PLATE STAR SCREW WASHER
16	R3FE-003	6X16 POSITIONER PLATE SCREW
17	R3PL-052	DRUM CAM
18	R3PL-051	DRUM
19	R3PL-054	DRUM NIPPLE
20	R3FE-006	2,5X16 DRUM NIPPLE SCREW
21	R3PL-081	SPRING MECHANISM
22	R3FE-005	3,3X9,5 SPRING MECHANISM FIXING SCREW
23	R3MO-S/M	CYF COIN MECHANISM

PICTURE 4

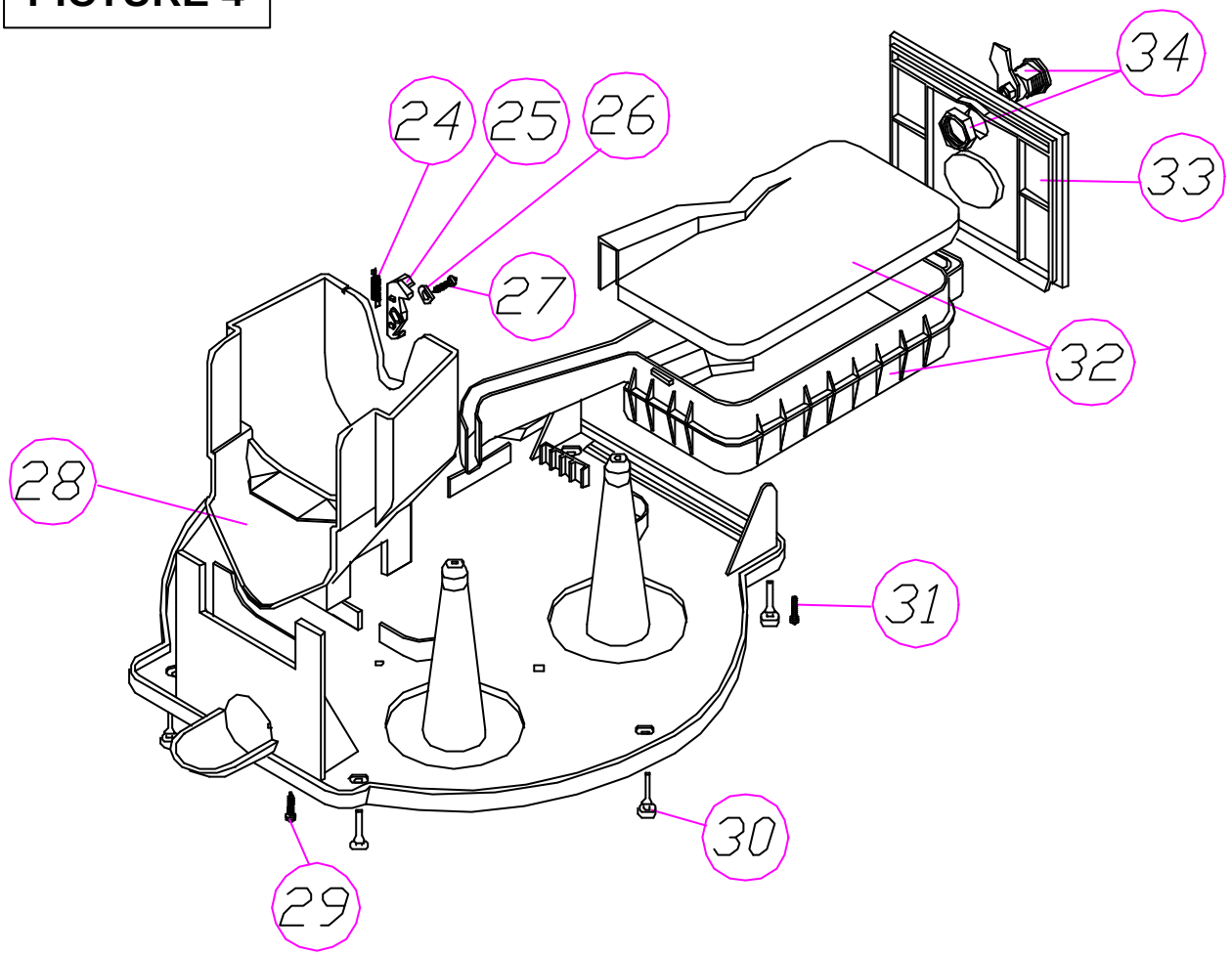

PICTURE 4 PARTS		
Nº	**Code**	**Description**
24	R3FE-404	PAWL SPRING
25	R3PL-053	DRUM PAWL
26	R3FE-203	PAWL SCREW WASHER
27	R3FE-002	3,5X16 PAWL SCREW
28	R3PL-031	PRODUCT DELIVERY CHUTE
29	R3FE-004	3,9X13 PRODUCT DELIVERY CHUTE FIXING SCREW
30	R3PL-022	CYF BASE HEEL
31	R3FE-008	3,3X16 BODY SECURITY SCREW
32	R3PL-061	COIN BOX + LID
33	R1MT-001	COIN BOX DOOR
34	R3CE-S/M	COIN BOX LOCK

PICTURE 5

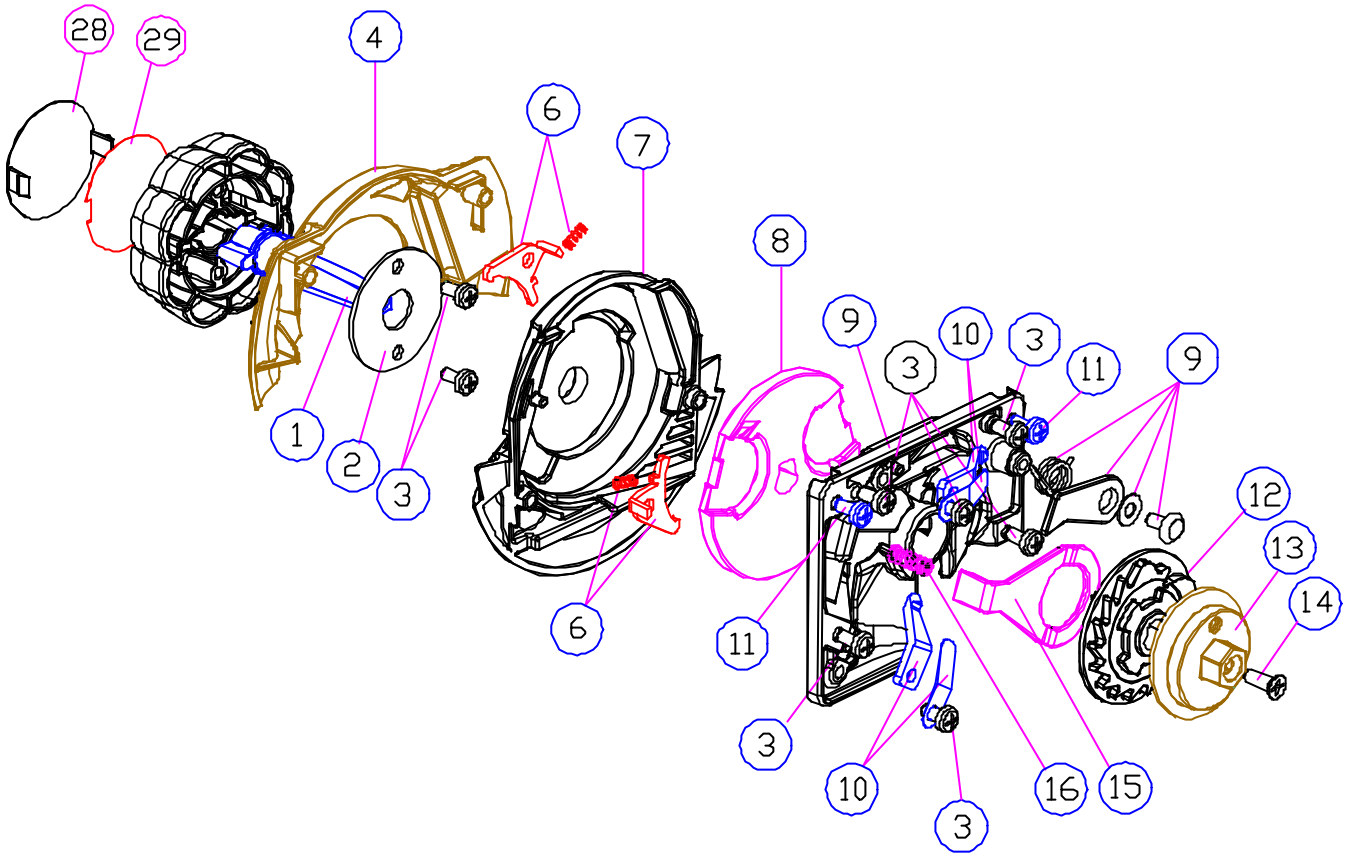

REF. R1MO- S/M CYF COIN MECHANISM

PICTURE 5 PARTS		
Nº	**Code**	**Description**
1	R1MO-983	COIN SHAFT FOR 1 AND 2 COINS
2	R1MO-982	HANDLE LOCKING PLATE
3	R1MO-994	HANDLE SCREW/ CHASSIS / HOOK STRIP
4	R1MO-904	1 COIN YELLOW SELECTOR
	R1MO-914	2 COINS YELLOW SELECTOR
6	R1MO-986	DIAMETER READER CAM + SPRING
7	R3MO-904	GOLD-PLATED FRONT CHASSIS
8	R1MP-S/M	COIN CARRIER
9	R1MO-985	REAR CHASSIS
10	R1MO-987	THICKNESS COIN READER HOOK + STRIP
11	R1MO-993	COIN SELECTOR SCREW
12	R1MO-990	1 AND 2 COINS COGGED CAM
13	R1MO-991	COIN MECHANISM EXTENSION
14	R1MO-992	EXTENSION SCREW
15	R1MO-988	1 AND 2 COINS BALANCE LEVER
16	R1MO-989	BALANCE LEVER SPRING
28	R3MO-902	LOGO PROTECTOR
29	R3MO-903	CHUPA CHUPS LOGO STICKER
	R3MO-901	CYF COIN MECHANISM HANDLE

KITS	
Code	Description
R3MO-901	CYF COIN MECHANISM HANDLE (KIT)
R3PL-021	BASE + HEELS (KIT)
R3PL-041	HIGH IMPACT + FIXED STAR SEGMENT (KIT)
R3PL-045	SERVICE HEAD OPERATOR (KIT)
R3PL-055	DRUM + SPRING MECHANISM (KIT)
R3PL-056	COMPLETE PRODUCT DELIVERY CHUTE (KIT)
R3PL-072	16 STAR SET

R3MO-901 CYF COIN MECHANISM HANDLE (KIT)

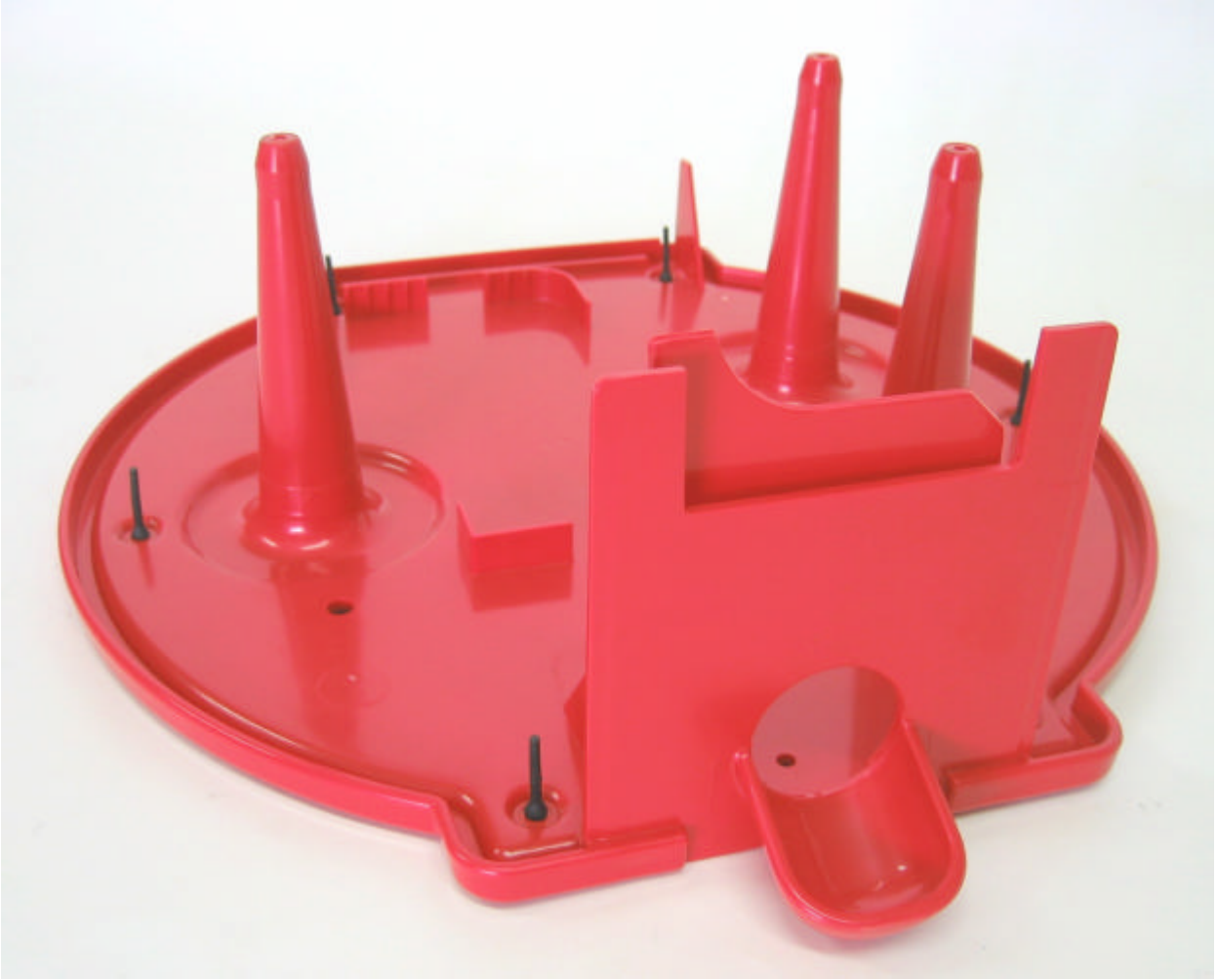

R3PL-021 BASE + HEELS (KIT)

R3PL-041 HIGH IMPACT + FIXED STAR SEGMENT (KIT)

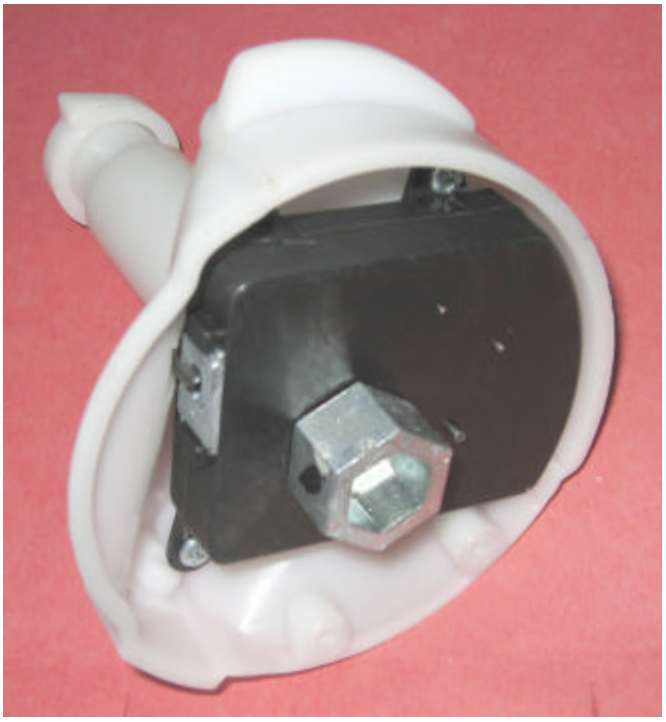

R3PL-055 DRUM + SPRING MECHANISM (KIT)

R3PL-056 COMPLETE PRODUCT DELIVERY CHUTE (KIT)

R3PL-045 SERVICE HEAD OPERATOR (KIT)

R3PL-072 16 STAR SEGMENT SET

OPTIONAL ACCESSORIES	
Code	Description
MCST-001	CYF STAND A (FOOT)
MCST-102	CYF STAND B (ARM)
R3CO-002	COUNTER SET
R3FE-601	DYNAMOMETER SCREWDRIVER
R3FE-602	HEXAGONAL POINT DYNAMOMETER SCREWDRIVER
R3FE-603	FIXED STAR SEGMENT LEVER SPANNER
R3FE-604	N.2 ALLEN SPANNER
R3EM-001	HIGH IMPACT BAG

PICTURE 6

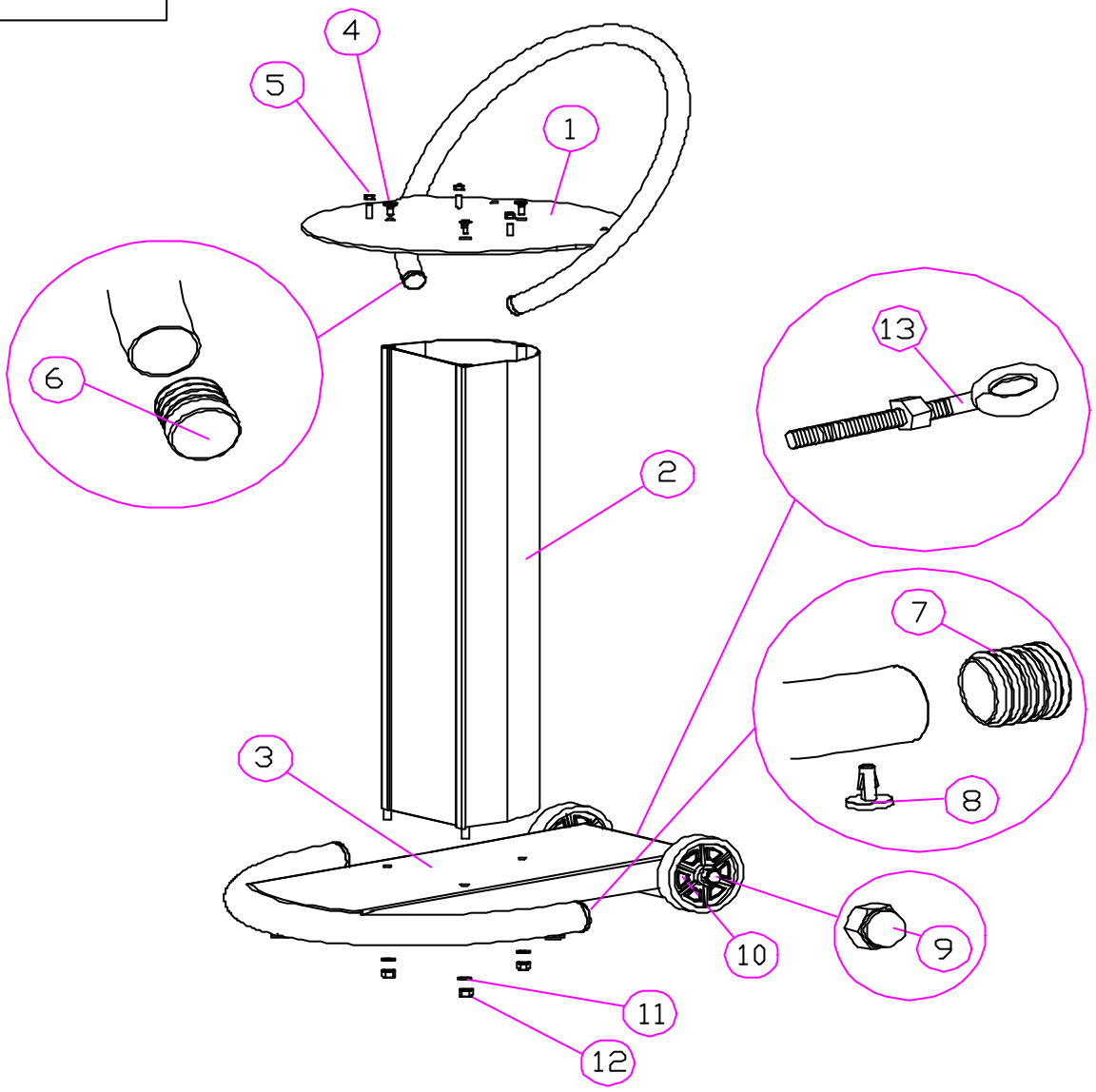

MCST- 001 CYF STAND A (FOOT)

PICTURE 6 PARTS		
Nº	**Code**	**Description**
1	R3MT-023	UPPER BASE CYF STAND
2	R3MT-022	STAND COLUMN + CHUPA CHUPS PUBLICITY
3	R3MT-021	LOWER BASE CYF STAND
4	R1FE-003	M-6X16 ALLEN CONICAL SCREW
5	R1FE-103	M-6 HEXAGONAL NUT
6	R3FE-503	UPPER TUBE CAP
7	R3FE-501	BASE TUBE CAP
8	R3FE-502	BASE TUBE STOPPER
9	R1FE-101	WHEEL NUT
10	R1PL-601	WHEEL
11	R3FE-204	STAND BASE NUT WASHER
12	R3FE-101	STAND BASE SELF-BLOCKING
13	R3FE-010	STAND SECURITY HOOP

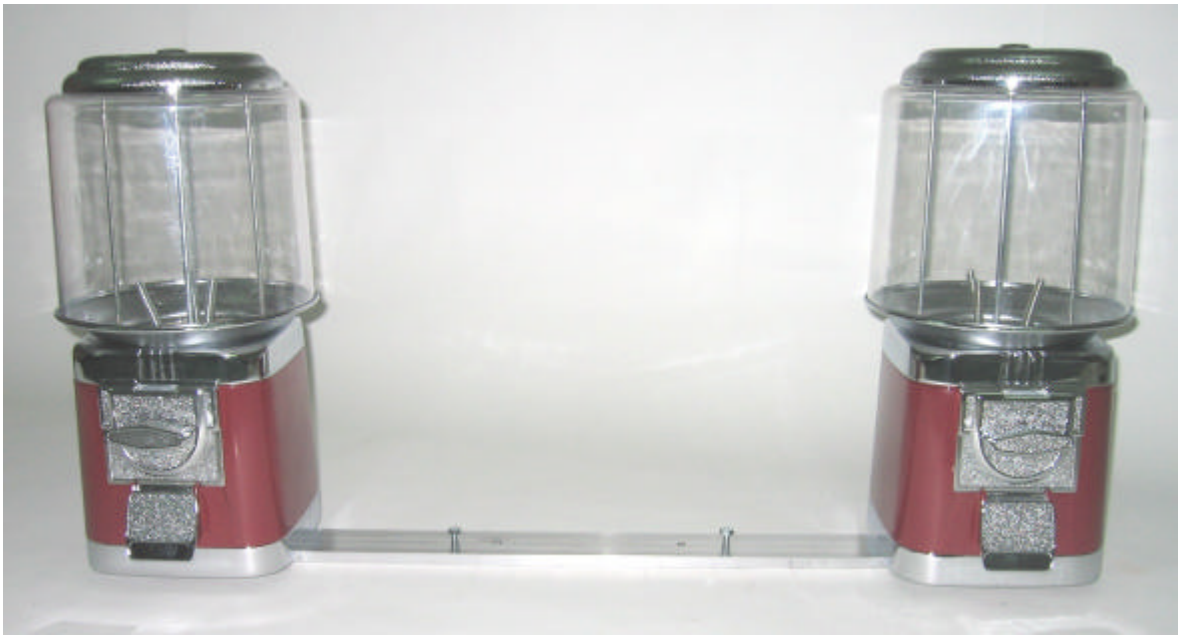

MCST CYF STAND B + 2 MINI VENDOR

MCST-102 CYF STAND B (ARM)

R3FE-601 DYNAMOMETER SCREWDRIVER

Use: To adjust the speed of the spring mechanism.

R3FE-602 HEXAGONAL POINT DINAMOMETER SCREWDRIVER

Use: Special point adapted to the axle of the spring mechanism.

R3FE-603 FIXED STAR SEGMENT LEVER SPANNER

Use: To fit the levers into the axles of the fixed star segment.

R3FE-604 N.2 ALLEN SPANNER

Use: Unscrew/screw the stud to the drum cam.

R3EM-001 HIGH IMPACT BAG

Use: To make easier to transport the high impact.

R3CO-002 COUNTER SET